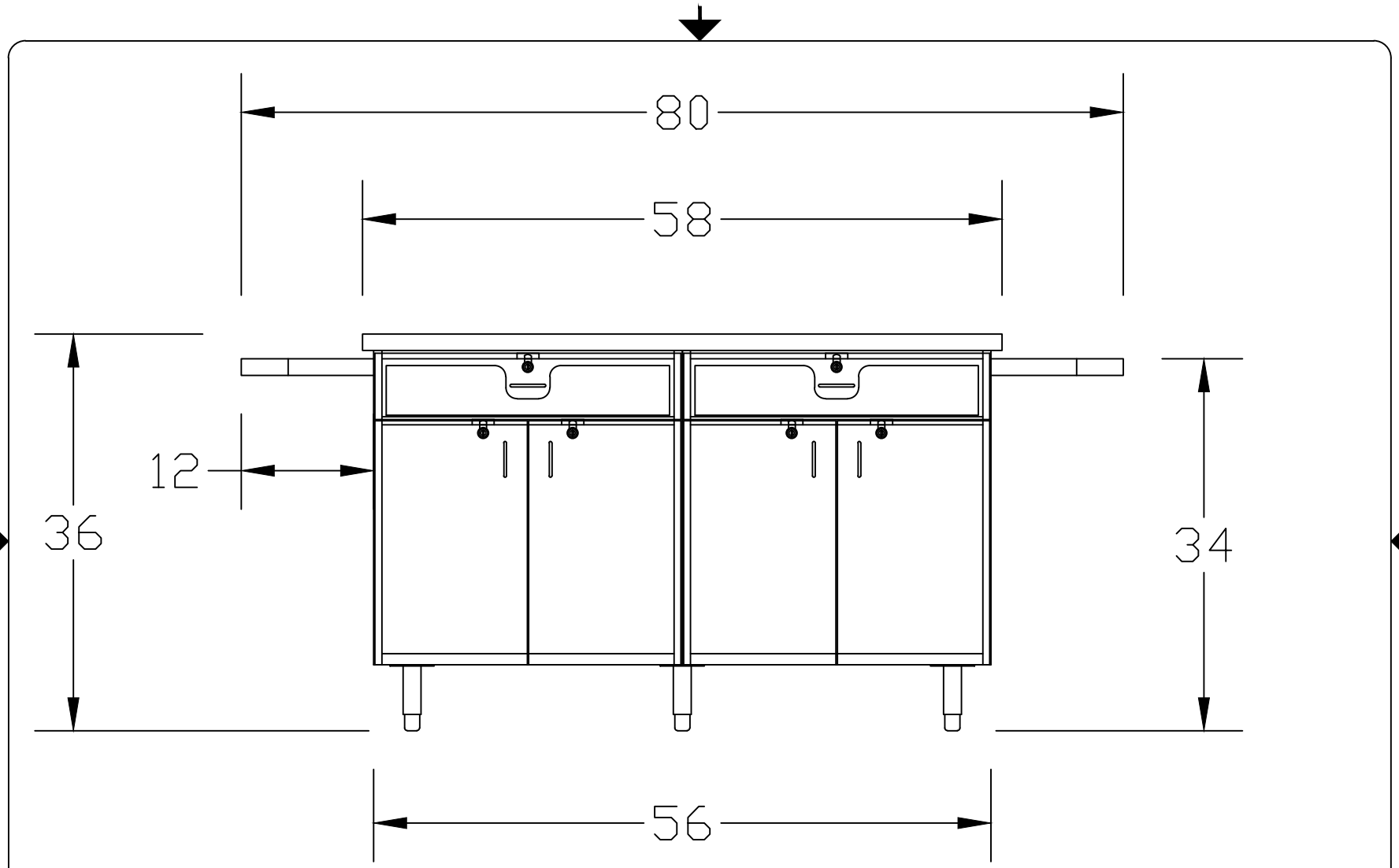

DRAWN BY: CJS / GRS

DATE: 5/2/13

AXIS Designs & Architectural Millwork, Inc.

FOOD SERVICE AND BREAKROOM SPECIALISTS
P.O. BOX 154 SUGAR GROVE, IL 60554
630.466.4549 FAX 630.466.4540